MODEL # RWUH-42-117

Design Notes

Code..... ASME Sec IV HLW
Design Pressure..... 125 psi
Test Pressure.....125 psi
Interior.....Glass Lining
Exterior.....Baked Enamel Steel Jacket
Insulation..... 2" R-12 Open cell foam
Supports.....Saddles
Capacity.....645 Gal. / 702 nominal
Weight.....1352 Lbs.

Material Specifications

Heads..... Carbon Steel
Shell..... Carbon Steel
Jacket..... 24 Gauge Steel
Couplings..... Carbon Steel
Flanges..... N/A
Pipe..... N/A
Manway..... Carbon Steel

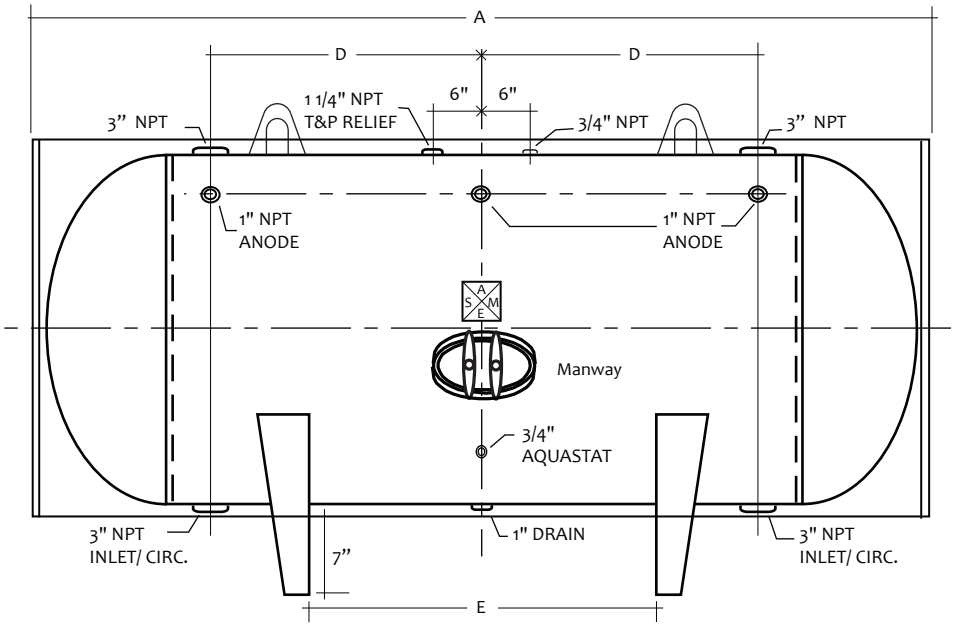

HORIZONTAL STORAGE TANK

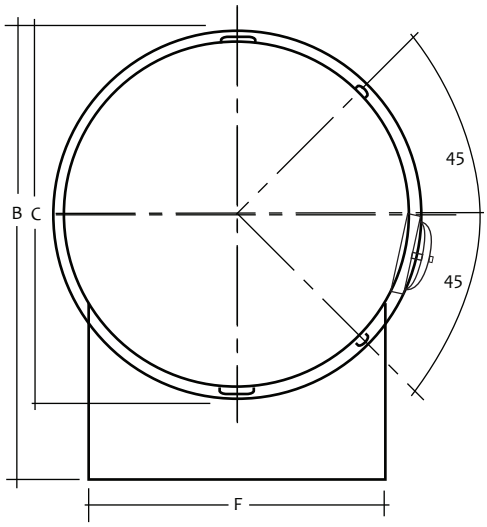

Mark	Dimension	Remark
A	121"	Overall length
B	53"	Overall height
C	46"	Diameter
D	42"	Circulation
E	60"	Supports
F	36.75"	Support width

NOTES	
PROJECT	
CUSTOMER	
SCALE	Not to Scale
DATE	
CUSTOMER P.O. #	
DRAWING Rev NO.	