MODEL # RWUV-36-072

Design Notes

Code..... ASME Sec IV HLW
Design Pressure..... 125 psi
Test Pressure.....125 psi
Interior.....Glass Lining
Exterior..... Baked Enamel Steel Jacket
Insulation..... 2" R-12.5 Open Cell Foam
Supports..... 2" Rails
Capacity.....285 Gal./ 318 nominal
Weight.....714 Lbs.

Material Specifications

Heads..... Carbon Steel
Shell..... Carbon Steel
Couplings..... Carbon Steel
Flanges..... N/A
Pipe..... N/A
Manway..... N/A
Jacket..... 24 Gauge Steel

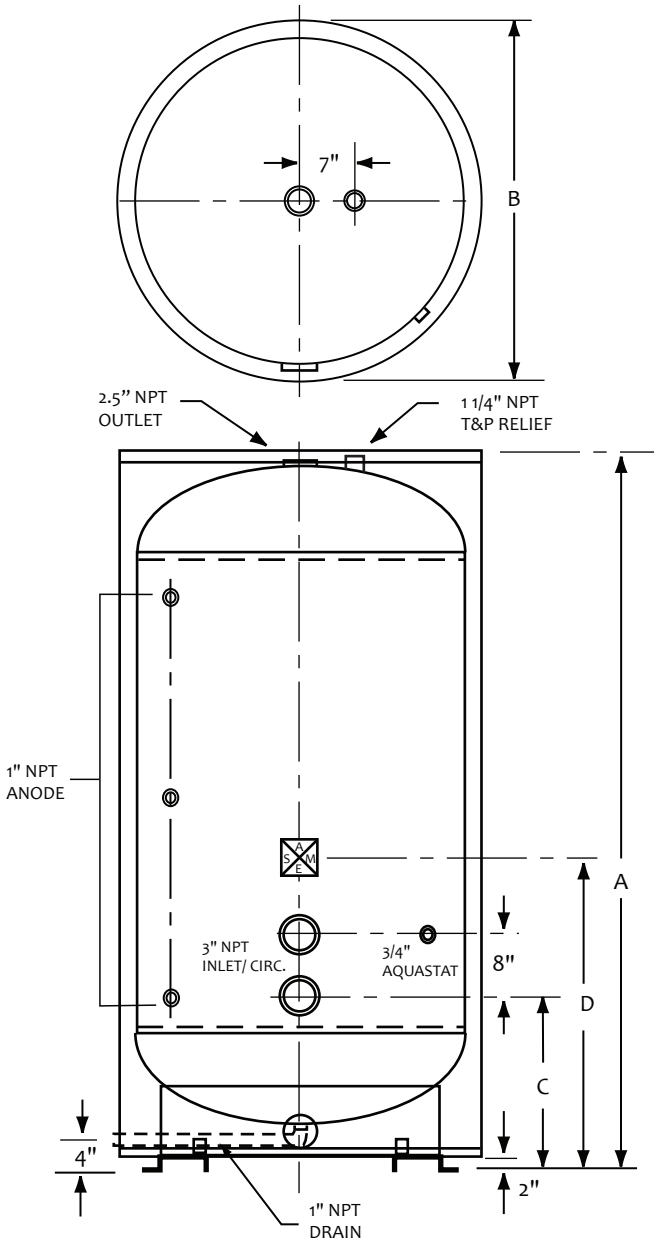

Mark	Dimension	Remark
A	80"	Overall height
B	40"	Diameter
C	21"	Circulation

NOTES	
PROJECT	
CUSTOMER	
SCALE	Not to Scale
DATE	
CUSTOMER P.O. #	
DRAWING Rev NO.	